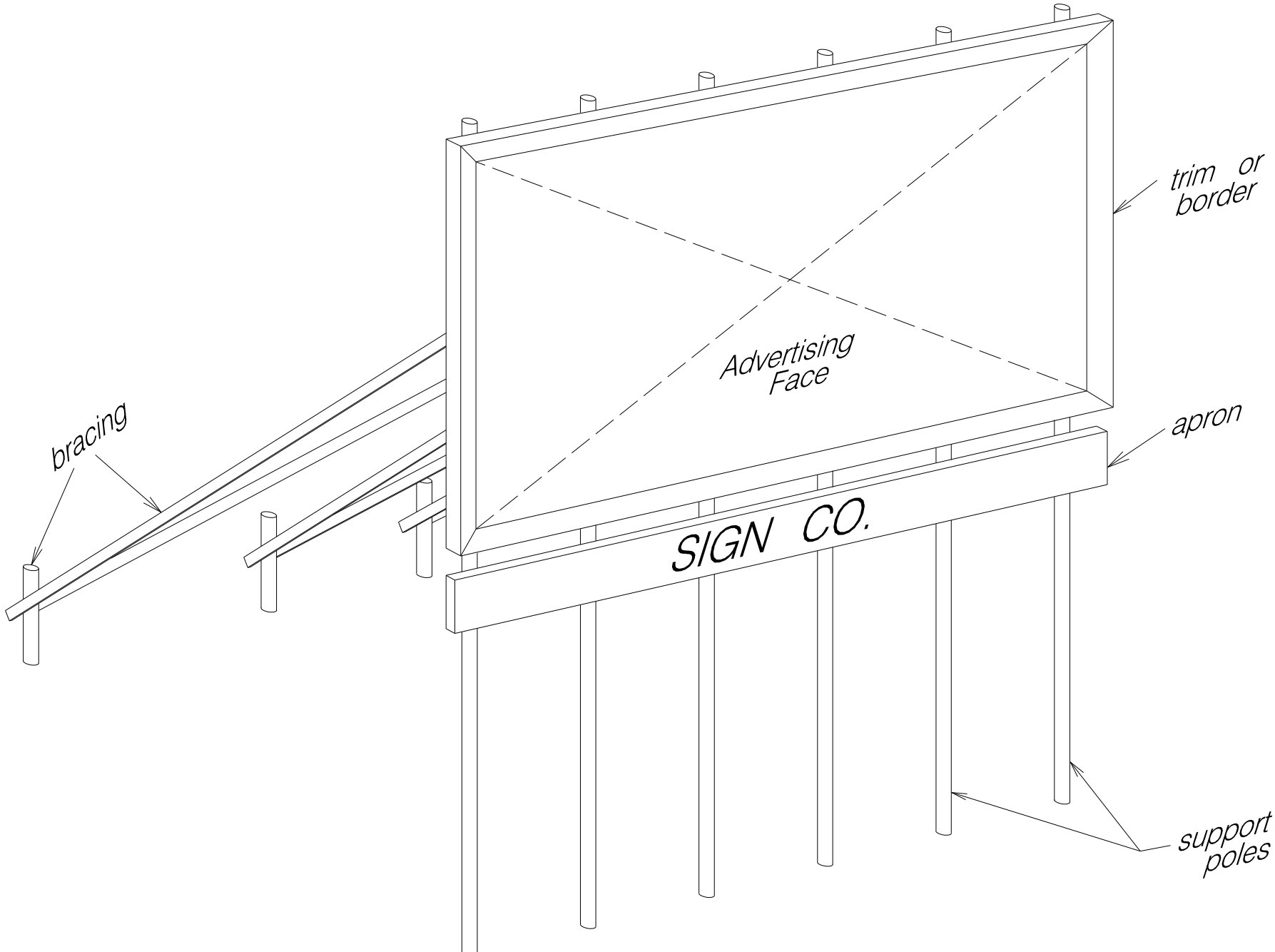
trim or
border
Advertising
Face
apron
bracing
SIGN CO.
support
poles